ELECTRICAL SAFETY COUNCIL

Guidance on the **management** of **electrical safety** and **safe isolation** procedures for **low voltage installations**

2

BestPracticeGuide

Issue 2

HSE

Best Practice Guide

This is one of a series of **Best Practice Guides** produced by the Electrical Safety Council* in association with leading industry bodies for the benefit of electrical contractors and installers, and their customers.

The Electrical Safety Council is indebted to the following organisations for their contribution and/or support to the development and revision of this Guide, and in particular to SELECT and the HSE for providing the initial draft:

BEAMA
www.beama.org.uk

BSI
www.bsigroup.com

City & Guilds
www.cityandguilds.com

Electrical Contractors' Association
www.eca.co.uk

ELECSA
elecsa.org.uk

HSE
www.hse.gov.uk

Institution of Engineering and Technology
www.theiet.org

NAPIT
www.napit.org.uk

NICEIC Group Ltd
www.niceic.com

SELECT (Electrical Contractors' Association of Scotland)
www.select.org.uk

In electronic format, this Guide is intended to be made available free of charge to all interested parties. Further copies may be downloaded from the websites of some of the contributing organisations.

The version of this Guide on the Electrical Safety Council website (**www.esc.org.uk**) will always be the latest. Feedback on any of the Best Practice Guides is always welcome – email **bpg@esc.org.uk**

The Electrical Safety Council is supported by all sectors of the electrical industry, approvals and research bodies, consumer interest organisations, the electrical distribution industry, professional institutes and institutions, regulatory bodies, trade and industry associations and federations, trade unions, and local and central government.

*The Electrical Safety Council (formerly the National Inspection Council for Electrical Installation Contracting) is a charitable non-profit making organisation set up in 1956 to protect users of electricity against the hazards of unsafe and unsound electrical installations.

ELECTRICAL SAFETY COUNCIL

Published by:
The Electrical Safety Council
18 Buckingham Gate
London
SW1E 6LB

Tel: 0870 040 0561 **Fax:** 0870 040 0560
Email: bpg@**esc**.org.uk
Website: www.**esc**.org.uk

The Electrical Safety Council and other contributors believe that the guidance and information contained in this Best Practice Guide is correct, but all parties must rely on their own skill and judgement when making use of it. Neither the Electrical Safety Council nor any contributor assumes any liability to anyone for any loss or damage caused by any error or omission in this Guide, whether such error or omission is the result of negligence or any other cause. Where reference is made to legislation, it is not to be considered as legal advice. Any and all such liability is disclaimed.

© The Electrical Safety Council. September 2009

Guidance on the **management** of **electrical safety** and **safe isolation** procedures for **low voltage installations**

This Best Practice Guide has been produced in conjunction with the Health and Safety Executive (HSE). Its purpose is to provide practical guidance for employers, employees and the self-employed on the management of electrical safety, with particular emphasis on low voltage safe isolation procedures to be followed during construction and refurbishment projects, and during maintenance activities.

The guidance is aimed at protecting employees and other workers against serious or fatal electrical injuries. Although the principles apply generally, the guidance is particularly relevant to circumstances where work is being carried out in the presence of other trades, and to sites where more than one electrician is employed.

Introduction

This Best Practice Guide explains what needs to be done to make sure workers on site are not exposed to danger when working on or near live electrical systems and equipment in buildings, particularly in the final stages of construction.

Every year, people working on construction sites and on refurbishment and maintenance activities suffer electric shock and burn injuries some of which, tragically, are fatal. Electrical contractors should be aware that many of these accidents are a direct consequence of electricians not implementing safe isolation procedures on low voltage installations (that is, those operating at up to 1000 V a.c. or 1500 V d.c.).

An example of one such fatal incident is given on the following page.

©The Electrical Safety Council

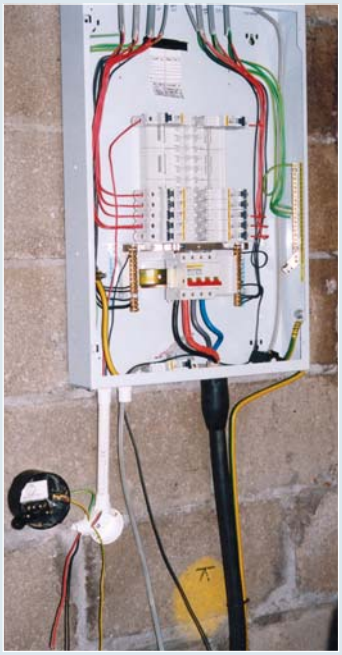

An electrician working on a new-build construction project installed the three-phase and neutral distribution board shown in the photograph. He energised the supply to the distribution board before the circuits connected to it were complete, to provide a supply to a socket-outlet.

He was connecting the supply cables to a wall-mounted timer unit, with the line conductor connected to the circuit-breaker at the top left hand side of the busbar assembly. The circuit-breaker had not been securely isolated and was ON as he stripped the insulation from the end of the cable. He touched the live copper conductor of the cable and was electrocuted.

The distribution board was manufactured to a high standard of safety. However, if he needed to energise the board before it was complete, he should first have replaced the cover and switched off and locked the circuit-breakers supplying unfinished or incomplete circuits. He should also have ensured that circuits were not connected into circuit breakers until they were complete and had been tested.

Experience shows that electricians employed by electrical contractors are particularly at risk of death or serious injury from electric shock or burns if they fail to follow safe working procedures. To achieve compliance with the legislation explained in this Guide, electrical contractors should not allow or condone dangerous work practices and should arrange for the safe working practices explained in the Guide to be implemented diligently.

Whereas this Guide is aimed primarily at electrical contractors and their employees, principal contractors and non-electrical subcontractors have a significant role in managing electrical risks during construction and refurbishment projects. Principal contractors and their non-electrical subcontractors should make themselves familiar with this Guide to ensure, firstly, that they do not place electrical contractors under pressure to implement unsafe practices; and, secondly, that they understand how their own employees may achieve safety from electrical risks.

Legislation

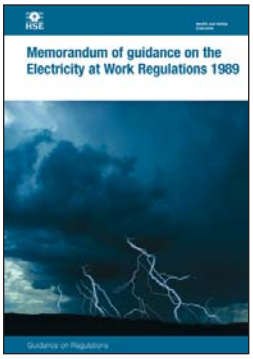

The Health and Safety at Work etc. Act 1974 sets out the general health and safety duties of employers, employees and the self-employed. *The Electricity at Work Regulations 1989*, which were made under the Act, require precautions to be taken against the risk of death or personal injury from electricity in work activities.

Duties are placed on employers to ensure, amongst other things, that employees engaged in such work activities on or near electrical equipment* implement safe systems of work, have the technical knowledge, training or experience to carry out the work safely, and are provided with suitable tools, test equipment and personal protective equipment appropriate to the work they are required to carry out.

**The definition of 'electrical equipment' is very broad, including anything used or intended to be used or installed for use, to generate, provide, transmit, transform, rectify, convert, conduct, distribute, control, store, measure, or use electrical energy.*

©The Electrical Safety Council

Under the *Health and Safety at Work etc Act*, employees are required to co-operate with their employer to enable the requirements of the regulations to be met. This includes complying with any instructions given on matters such as safe systems of work. *The Electricity at Work Regulations 1989* require that employees themselves comply with the regulations.

The Management of Health and Safety at Work Regulations 1999 require employers to make a suitable and sufficient assessment of the risks to the health and safety both of their employees and of other persons arising out of, or in connection with, the conduct of their undertakings. Where five or more persons are employed, the employer must record the significant findings of these risk assessments.

HSE Guidance

Generic guidance on safe working practices for work on electrical equipment is published by the Health and Safety Executive (HSE) in its guidance note entitled *Electricity at Work – Safe Working Practices* (HSG85).

It provides information on dead and live working and on isolation procedures when working on both Low Voltage (LV) and High Voltage (HV) systems. This Best Practice Guide covers LV systems only and is targeted at the work of electrical contractors, particularly in the construction sector. Extra precautions need to be taken when working with HV equipment and circuits, and reference should be made to the detailed guidance provided in HSG85 in such circumstances.

The *Memorandum of Guidance on the Electricity at Work Regulations 1989* HSR(25) is intended to help duty holders meet the requirements of the regulations. It will be of interest and practical help primarily to engineers, technicians and their managers (including those involved in the design, construction, operation or maintenance of electrical systems and equipment).

It sets out the regulations and gives technical and legal guidance on the regulations. Its purpose is to amplify the nature of the precautions in general terms so as to help in the achievement of high standards of electrical safety in compliance with the duties imposed.

In the context of risks arising from live work, regulation 14 of the *Electricity at Work Regulations 1989* requires that:

No person shall be engaged in any work activity on or so near any live conductor (other than one suitably covered with insulating material so as to prevent danger) that danger may arise unless –

(a) it is unreasonable in all the circumstances for it to be dead; ***and***

(b) it is reasonable in all the circumstances for him to be at work on or near it while it is live; ***and***

(c) suitable precautions (including where necessary the provision of suitable protective equipment) are taken to prevent injury.

It should be noted that all three conditions must be met in order for work on or near live conductors to be carried out.

©The Electrical Safety Council

To comply with regulation 14 of the *Electricity at Work Regulations 1989* (work on or near live conductors), dead working should be the normal method of carrying out work on electrical equipment and circuits.

Live working, which includes not only working on live uninsulated conductors but also working so near live uninsulated conductors that there is a risk of injury, should only be carried out in circumstances where it is unreasonable to work dead.

Typically this would include some types of fault finding and testing (including the live testing requirements of BS 7671 – *Requirements for Electrical Installations (IEE Wiring Regulations)*), but only where the risks are acceptable and where suitable precautions are taken against injury, including the provision of adequate training and personal protective equipment (PPE).

Pressure to carry out live work is becoming more common in areas such as construction sites, high cost manufacturing and in retail outlets operating twenty-four hours per day, seven days a week.

Irrespective of these pressures, the requirements of the regulations still apply in such situations and live working should only be carried out when justified using the criteria explained in HSG85.

For systems where the supply has been cut off to allow dead working, regulation 13 of the *Electricity at Work Regulations 1989* applies as follows:

Adequate precautions shall be taken to prevent electrical equipment, which has been made dead in order to prevent danger while work is carried out on or near that equipment, from becoming electrically charged during that work if danger may thereby arise.

This regulation therefore requires that adequate precautions are taken to ensure that conductors and equipment cannot inadvertently be energised while the work is taking place – this is the process of isolation.

The Electricity at Work Regulations 1989 definition of *'isolation'* is given in regulation 12 and means *the disconnection and separation of the electrical equipment from every source of electrical energy in such a way that this disconnection and separation is secure.*

In effect this means not just cutting off the supply but also ensuring that the means of disconnection is secure, as described in this Guide. In most instances this will require securing the means of disconnection in the OFF position and it is highly recommended that a caution notice or label is posted at the point of disconnection as described in the Guide under *'Safe isolation procedures'*.

Of equal importance is regulation 16. This requires that employers ensure that all employees involved in work on electrical equipment are competent.

Employees should be instructed on, and trained in, the implementation of safe systems of work. If they have not received such training and instruction, they should only work under the supervision of a competent person.

©The Electrical Safety Council

Site safety management

It is essential from the outset that effective management and control of the working practices on electrical systems and equipment, particularly in relation to safe isolation procedures, are established and maintained.

It should be noted that although this Guide is mainly aimed at construction sites, the general principles of management and control also apply to all electrical installation work including refurbishment and maintenance activities.

Directors and managers of companies employing electrical operatives should ensure that their requirements for safe working practices are clearly explained in company-specific electrical safety policy documents including site-specific risk assessments and method statements.

Guidance on how to carry out risk assessments and the form they should take is published by the HSE on its website at www.hse.gov.uk/risk/index.htm

All operatives should be shown these documents and have the contents including their responsibilities clearly explained. This can be done during site inductions and/or regular tool-box talks.

Managers should ensure that operatives understand the information regarding safe working practices, particularly where they may not have a good command of English.

It is very important for managers to ensure that these safety management documents are regularly reviewed. They should be updated as required if and when the risks change significantly, particularly during the period of a specific contract.

Directors and managers are expected to involve themselves in, and show visible and positive leadership in, the management of every aspect of health and safety on their sites.

Guidance on the roles and responsibilities of directors and managers is given in guidance leaflet *Leading Health and Safety at Work* (INDG417). This is a joint publication of the Institute of Directors and HSE, It is available at www.hse.gov.uk/leadership

Managers should also ensure that their operatives are provided with all the tools, suitable test equipment, personal protective equipment, locking clips, padlocks, keys and caution and danger notices identified in their risk assessments and method statements.

National Working Rule C2.4 in the Scottish Joint Industry Board (SJIB) handbook (2008 to 2011) requires operatives to provide particular tools and test equipment, including a proprietary test lamp or voltage detector.

The same rule requires employers to carry out periodic tool kit inspections to ensure that their employees are in possession of all the items listed in the handbook and they are of suitable quality and in good repair.

For projects where work is being carried out in the presence of other trades, and sites involving more than one electrical operative, it is essential that a suitably experienced and competent person is appointed to oversee the work on site during the construction of the electrical installation.

This appointed person's responsibilities should include the overseeing of the working practices of the operative(s) to ensure that they consistently and diligently follow the practices set out in the risk assessments and method statements.

They may also be given responsibility for controlling the work of appointed sub-contractors, who must provide appropriate method statements and risk assessments for their work.

©The Electrical Safety Council

The appointed person or manager may delegate (in writing) control of specific tasks and procedures to other competent persons who have appropriate training and competence in the performance of these tasks and procedures.

On construction projects, once the electrical installation is nearing completion, ready for inspection and testing, and certainly before energising switchgear, suitable doors should be fitted to all switch-rooms and riser entrances, and heavy duty locks or padlocks fitted accordingly.

Access to these areas should be controlled and restricted to competent persons or persons who are under supervision in accordance with the site electrical safe systems of work.

The access doors should be locked when electrical operatives are not working in these areas and danger notices warning of any live services present posted at all times. Plant and materials should not be stored in locked electrical switch-rooms or electrical risers.

It is always preferable to avoid energising any outgoing electrical distribution services until the distribution switchgear and all connected circuits are complete and have been inspected and dead-tested in accordance with the requirements of BS 7671.

The inclusion of clauses within contracts regarding stage payments to contractors initiated by energising parts of an installation should be discouraged as they may encourage the contractors to energise prematurely due to financial pressures.

If live services are required by others before all installation work and inspection and testing associated with the relevant distribution boards have been fully completed, and this cannot be resisted, distribution boards and circuits should not be energised unless the electrical contractor has a written request from the principal contractor or the principal contractor's agent, and the electrical contractor agrees it is safe to do so.

In such cases, and before use of any distribution board or circuit, the following should be implemented:

- Blanking plates must be fitted in unused ways of the affected distribution boards, covers fitted and circuit schedules marked up to show the precise status of the installation; and

- Managers should review their risk assessments and method statements and update them as necessary to reflect the changed circumstances. Any changes to working practices should be brought to the attention of the operatives and any other workers at the site who may be affected; and

- No circuit should be made available for use until it has been fully completed and inspected and tested in accordance with BS 7671 including checks to ensure that earthing arrangements and protective conductors (including main protective bonding conductors) are in place; and

- Any circuit that is incomplete or has yet to be fully inspected and tested must remain securely isolated at the supply end.

All workers, supervisors and managers on construction sites should be made aware that it is not considered reasonable to work on or near uninsulated live conductors solely on the grounds of convenience, or of saving time or cost.

When live services are provided prior to final commissioning and handover, in order to make sure that everyone working on site is aware of any live circuits in an area, danger notices should be displayed on the following items:

- Energised main and sub-main switchgear and distribution boards

©The Electrical Safety Council

- Energised plant

- Exposed cables which are liable to be damaged by other trades or the environmental conditions.

People entering completed and energised areas working under instructions from the principal contractor or client's representative must be made aware of the extent of the live services within the respective areas by the electrical contractor, principal contractor or client's representative. They should assume that all services within such areas are energised.

The electrical contractor must inform the principal contractor when they intend to complete and energise the electrical installation in an area. The principal contractor must then ensure that the client's representative and all persons on site are informed that the electrical installation in that area has been energised.

All contractors should advise their employees of this fact at appropriate site inductions and toolbox talks.

Safe isolation procedures

For all work on LV electrical equipment or circuits, it is important to ensure that the correct point of isolation is identified, that an appropriate means of isolation is used, and that the supply cannot inadvertently be reinstated while the work is in progress. The conductors must be proved to be dead at the point of work before they are touched and where necessary caution notices should also be applied at the point(s) of isolation.

In the interests of avoiding inadvertent energisation, a good principle to adopt is that the point of isolation should be under the control of the person who is carrying out the work on the isolated conductors.

If alternative means of controlling the security of the isolation are adopted, such as the point of isolation being kept under the control of an appointed (authorised) person, these means should be equally effective at preventing inadvertent reinstatement of the supply.

The means of isolation can be an adjacent local isolation device such as a plug and socket-outlet, fused connection unit, switch-disconnector, circuit-breaker, fuse etc, as appropriate, which is under the direct control of the competent person carrying out the work.

When isolating the main source of energy, it is also essential to isolate any secondary sources (such as standby generators, uninterruptible power supplies and microgenerators).

A comprehensive list of devices that can be used for isolation is given in Table 53.2 of BS 7671: 2008.

These devices can be used without further precautions provided there is no foreseeable risk that the supply could be reinstated by others prior to the work being completed by the competent person.

©The Electrical Safety Council

Note:
Circuit-breakers conforming to BS EN 60898 are suitable for isolation and may be marked with the following symbol: ⊢

However, miniature circuit-breakers (MCBs) manufactured to earlier standards (such as BS 3871) are unlikely to be suitable for isolation.

Switchgear conforming to BS EN 60947-3 and circuit-breakers and RCDs conforming to BS EN 60947-2 are suitable for isolation if marked with the symbol shown above.

See Annex 1 for further guidance on the identification of devices suitable for isolation.

Where there is no such local means of isolation or where there is a risk of reinstatement of the supply, the circuit or equipment to be worked on should be securely isolated by one of the following methods

- ***Isolation using a main switch or distribution board switch-disconnector***

Isolation of equipment or circuits using the main switch or distribution board switch-disconnector is the preferred method. The point of isolation should be locked off using a unique key or combination retained by the person carrying out the work or the appointed person, and a caution notice attached to the point of isolation.

Courtesy of Reece Safety Products Ltd

Where more than one operative is working on circuits supplied from an isolated distribution board, a multi-lock hasp can be used to prevent operation of the main isolator until such time that all persons working on the installation have completed their work and removed their padlocks from the hasp.

If locking-off facilities are not provided on the relevant switch, then a locked distribution board which prevents access to the switch-disconnector is acceptable provided the key or combination is unique and is retained by the person doing the work or the appointed person.

Again, multi-lock hasps can be used to control the isolation where more than one person is working on the installation. An alternative to a multi-lock hasp is a key box or similar system which provides effective control of access to the key for the point of isolation.

- ***Isolation of individual circuits***

Where it is intended that more than one person will be working on circuits supplied from a distribution board (that is, multiple isolations) and a multi-lock hasp cannot be used to secure the main switch-disconnector or the distribution board has to remain energised to supply other circuits, each circuit supplied from the distribution board on which work is to be carried out should be isolated by one or more of the following methods to prevent inadvertent reinstatement of the supply.

©The Electrical Safety Council

The principle is that each person carrying out such work should have control of their own point(s) of isolation and not rely on others, except an appointed person, to prevent deliberate or inadvertent energisation.

It is preferable that a final circuit distribution board is not energised until all of its final circuits

Note: Some distribution boards are manufactured with 'slider switches' to disconnect the circuit from the live side of the circuit breaker. These devices should not be relied upon as the only means of isolation for circuits, as they do not meet the requirements for isolation and the wrong switch could easily be operated on completion of the work.

2. Isolation of individual circuits protected by fuses

Where fuses are used, the removal of the fuse is an acceptable means of disconnecting the supply to an individual circuit for the purpose of isolation.

To prevent the fuse being replaced by others, the fuse should be retained by the person carrying out the work, and a lockable fuse insert with a padlock should be fitted to achieve secure isolation. A caution notice should be attached at the point of isolation.

Where lockable fuse inserts are not available, the following must be considered:

- Where removal of the fuse exposes live terminals that can be touched, a dummy fuse (that is a fuse carrier which is not fitted with a fuse link and which is clearly marked or coloured to make it conspicuous) should be inserted in the fuse way to cover live parts. When this is not possible, the incoming supply to the fuse will need to be isolated

- A caution notice should be attached to deter inadvertent replacement of a spare fuse

- In addition, if possible, the fuseboard door or cover should be locked to prevent access as advised above under *'Isolation using a main switch or distribution board switch-disconnector'*.

- **Temporary disconnection of the incoming supply**

For some types of work on existing installations, such as the replacement of main switchgear and consumer units, it is necessary for the distributor's service fuses to be withdrawn in order to disconnect the incoming supply for the purpose of isolation.

Legally, service fuses can be withdrawn only by the electricity supplier or distributor, or by those they have expressly authorised to carry out such work.

Note: **In TT systems, the incoming neutral conductor cannot reliably be regarded as being at Earth potential. This means that for TT supplies, a multi-pole switching device which disconnects the line and neutral conductors must be used as the means of isolation. For similar reasons, in IT systems, all poles of the supply must be disconnected.**

In these circumstances, single pole isolation, such as by fuses or single-pole circuit-breakers, is not acceptable.

Electrical permits-to-work

An electrical permit-to-work must be used for work on HV systems that have been made dead, and can be useful in certain situations for LV work, such as where there is more than one source of supply.

These permits are primarily a statement that a circuit or item of equipment is isolated and has been made safe to work on. They must not be used for live working as this can cause confusion.

Details on the use of these permits, including an example form, are given in HSG85.

©The Electrical Safety Council

Caution notices

In **all** instances where there is **any** risk that the supply could be reinstated, an appropriate warning/caution notice should be placed at the point of isolation. For distribution boards with 'multiple isolations', a single suitably worded notice on each distribution board, such as the example shown below, would suffice:

Example of a warning notice

CAUTION

THIS DISTRIBUTION BOARD HAS A NUMBER OF CIRCUITS THAT ARE SEPARATELY ISOLATED. PRIOR TO REINSTATING THE SUPPLY TO AN INDIVIDUAL CIRCUIT, CARE SHOULD BE TAKEN TO ENSURE THAT IT IS SAFE TO DO SO.

Proving dead isolated equipment or circuits

It is important to ensure that the correct point of isolation is identified before proving dead.

Where possible and safe to do so, this may include testing with the isolating device first in the ON position and then in the OFF position to establish that the equipment or circuit is under the control of that device.

Following isolation of equipment or circuits and **before** starting work it should be **proved** that the parts to be worked on, and those nearby, are dead.

It should never be assumed that equipment is dead because a particular isolation device has been placed in the OFF position.

The procedure for proving dead should be by use of a proprietary test lamp or two-pole voltage detector as recommended in HSE Guidance Note GS38, *Electrical test equipment for use by electricians*.

Typical devices for proving dead

The use of multimeters, makeshift devices and non-contact voltage indicators (voltage sticks) is not advised for voltage detection as such use has caused accidents.

©The Electrical Safety Council

The test lamp or voltage detector should be proved to be working on a known live source, proprietary proving unit or in-built test feature before and after use. All line, neutral and protective conductors of the circuit should be tested and proved to be dead.

Electricians who regularly work on installations that have been energised should be equipped with devices for proving that conductors are dead.

Electricians who may occasionally work on installations that have been energised should have ready access to devices for proving conductors dead.

Additional precautions

New installations

New installations can be a particular hazard as some of the circuits or equipment may require to be modified after the installation has been energised.

It is therefore important that every protective device is correctly identified at each distribution board before any energising takes place, and safe isolation procedures, such as locking-off circuit breakers as described above, are adopted, particularly where a number of electricians are working on the same installation.

Alterations and additions

Alterations and additions to existing installations can also be particularly hazardous. Records including circuit identification may not be available, or may be inadequate or incorrect. It is therefore particularly important to ensure that circuits to be worked on have been correctly identified for isolation purposes prior to work commencing.

Circuits under automatic control

It is particularly important to correctly identify circuits for isolation purposes if they are under automatic control, such as by time switch or photocell.

Deaths and injuries have occurred where circuits have been proved to be dead at the point of work before work commenced, only for the circuits to be energised unexpectedly by automatic controls as work was underway.

©The Electrical Safety Council

Neutral conductor

Care should be taken when working on neutral conductors of circuits, particularly where single-pole isolation is used. The practice of 'borrowing' neutrals, that is using the neutral of one circuit as the neutral for another circuit, is not permitted by BS 7671. This dangerous practice, however, is not uncommon.

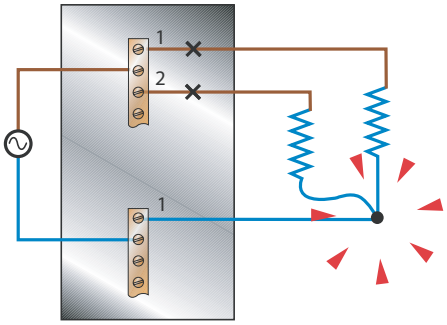

Courtesy of NICEIC Group Ltd

Lighting and control circuits are the most common examples of where this practice is found. In these circumstances, the neutral conductor can become live when it is disconnected, if an energised load on another circuit is connected to it.

It is also difficult to identify specific neutral conductors in 'bunches' of single core cables, such as where enclosed in trunking or conduit, and care should be taken when severing such cables that the correct conductor has been identified.

If doubt exists, live working measures, such as the use of eye protection, electricians' insulating gloves and insulated tools, should be employed until the circuit has been proved to be dead.

Protective conductors

Protective conductors of circuits having high protective conductor currents are effectively live, and should be treated with caution.

Significant protective conductor currents can be present in both power and lighting circuits.

Proving dead unused or unidentified cables

Where there is uncertainty regarding isolation when removing unidentified cables or proving dead an 'unused' cable, particularly where insufficient conductor is exposed to enable the use of test probes, those conductors should be assumed to be live until positively proven to be dead, and any work carried out on them should employ live working practices until the conductors are proved to be dead, and isolated.

If the cable cores are accessible, a clamp meter can be used as a means of identifying a cable by testing for current flow in the conductors. If the cores are not accessible, cable detection equipment may be used in conjunction with a signal generator.

Non-contact voltage indicators (voltage sticks) can also be useful in these situations to make a preliminary test for voltage where cables without a metallic sheath are to be identified.

If a non-contact indicator shows a cable to be live, it may be assumed to be so. However, if it does not, the cable must not be assumed to be dead.

Once insulation is removed using live working practices to reveal the underlying conductors, **contact** voltage detectors should be used as the means of proving that the conductors are dead.

©The Electrical Safety Council

Annex 1 - **Identification of devices suitable for isolation**

Table based on Table 53.2 of BS 7671: 2008 (as corrected), by kind permission of the Institution of Engineering and Technology.

DEVICE	STANDARD	SUITABLE FOR ISOLATION+
Switching device	BS 3676: Part 1: 1989 BS EN 60669-1 BS EN 60669-2-1 BS EN 60669-2-2 BS EN 60669-2-3 BS EN 60669-2-4 BS EN 60947-3 BS EN 60947-5-1	Yes*** No No No No Yes Yes* No
Contactor	BS EN 60947-4-1 BSEN 61O95	Yes* No
Circuit-breaker	BS 3871 BS EN 60898 BS EN 6094 7-2 BS EN 61009-1	No Yes Yes* Yes
RCD	BS 4293 BS EN 60947-2 BS EN 61008-1 BS EN 61009-I	No Yes* Yes Yes
Isolating switch	BS EN 60669-2-4 BS EN 60947-3	Yes Yes
Plug and socket-outlet < 32 A	BS EN 60309 IEC 60884 IEC 60906	Yes Yes Yes
Plug and socket-outlet > 32 A	BS EN 60309	Yes
Device for the connection of luminaire	BS IEC 61995-1	Yes**
Control and protective switching device for equipment (CPS)	BS EN 60947-6-1 BS EN 60947-6-2	Yes Yes*
Fuse	BS 88	Yes
Device with semiconductors	BS EN 60669-2-I	No
Luminaire supporting coupler	BS 6972	Yes**
Plug and unswitched socket-outlet	BS 1363-1 BS 1363-2	Yes** Yes**
Plug and switched socket-outlet	BS 1363-I BS 1363-2	Yes** Yes**
Plug and socket-outlet	BS 5733	Yes**
Switched fused connection unit	BS 1363-4	Yes**
Unswitched fused connection unit	BS 1363-4	Yes** (Removal of fuse link)
Fuse	BS 1362	Yes
Cooker Control Unit switch	BS 4177	Yes

\+ In an installation forming part of a TT or IT system, isolation requires disconnection of all the live conductors
* Isolation provided if the device is suitable and marked with the symbol for isolation
** Device is suitable for on-load isolation, that is disconnection whilst carrying load current
*** Isolation provided if the device is suitable and marked with

©The Electrical Safety Council

Annex 2

17th EDITION

Twelve easy steps to safe isolation

NAPIT

Highlighted here in a simple flow chart are twelve steps for the safe isolation of electrical circuits and equipment. The chart illustrates frequently used methods. It should be remembered that the most effective way of isolating circuits and equipment is to turn off the isolating switch in the consumer unit, or three-phase distribution board, locking it off and attaching a label.

This method of isolation – although very effective – presents other problems and may introduce other hazards to the working environment. One of them could be the lack of effective lighting to work safely.

Therefore it can be seen that careful thought and a risk assessment is essential to determine the most suitable method of isolation to use.

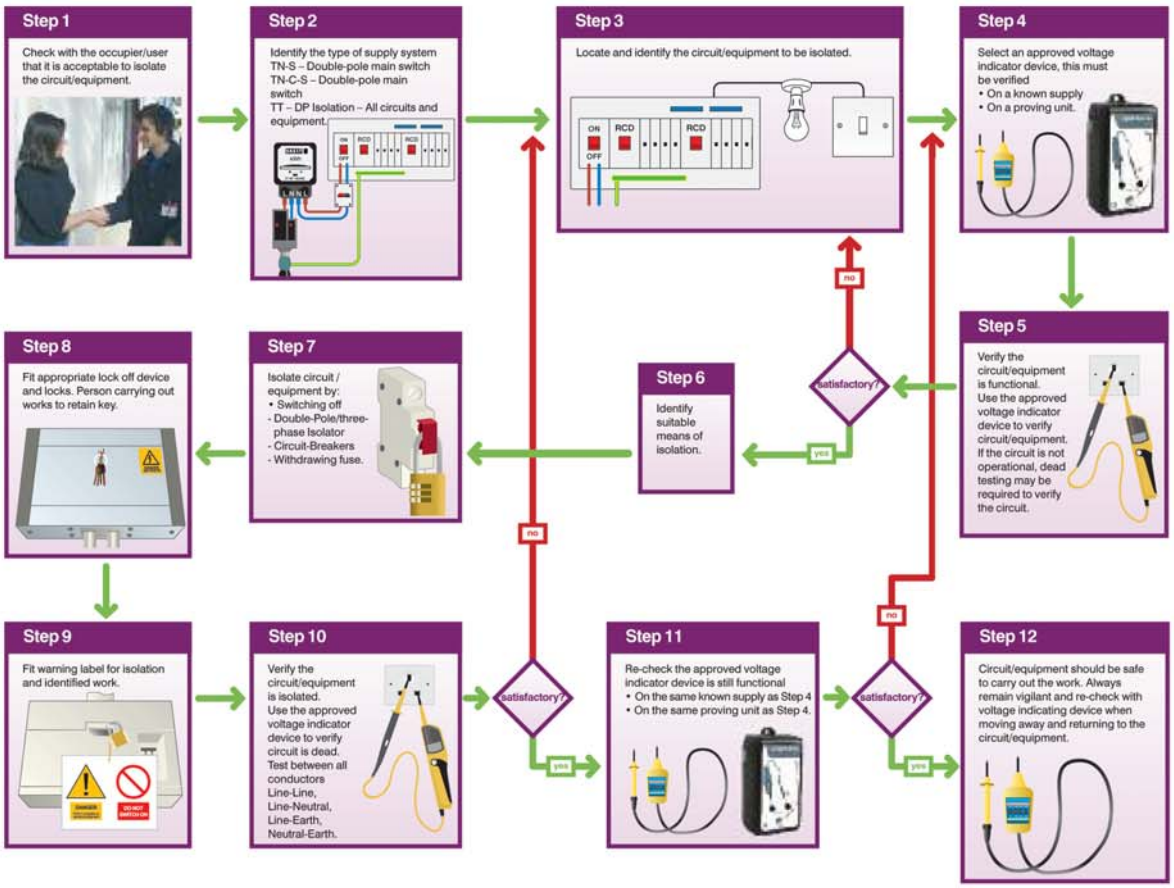

Process for re-energising the circuit/equipment

Step 1
After completing the work inspect and test in accordance with Part 6 BS 7671 (dead tests).

→

Step 2
Remove locking off devices, locks and labels and restore electrical supply.

→

Step 3
Complete testing (live tests). Commission circuit equipment.

→

Step 4
Complete and issue appropriate test certificates/reports.

NAPIT

©The Electrical Safety Council

Annex 3 - **Quick Guide to Safe Isolation Procedure**

GUIDE TO ISOLATION PROCEDURE

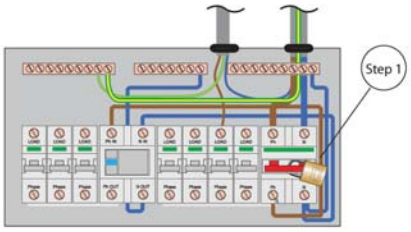

Step 1

Check it is safe and acceptable (with the occupier/user) to isolate. If the isolator is an off-load device, remove the load. Open the means of isolation for the circuit(s) to be isolated and secure the isolating device in the open position with a lock or other suitable means.

Step 2

Prove the correct operation of a suitable voltage detection instrument, see note (5), against a known voltage source, such as that illustrated.

Steps 3 and 4 are shown overleaf

Notes (also see notes overleaf)

(1) This guide gives information on safe working procedures for the isolation of the supply of electrical energy to electrical equipment.

(2) The example illustrated shows the minimum steps required to isolate the final circuits supplied by a single-phase consumer unit. The consumer unit includes an isolator and circuit-breakers.

(3) When circuits are protected by fuses enclosed in a distribution board, remote isolation of the supply to the distribution board may be required.

(4) *HSG85 Electricity at work safe working practices* gives detailed guidance on devising safe working practices for people who carry out work on or near electrical equipment.

(5) Guidance on voltage detection instruments is given in *HSE Guidance Note GS 38 – Electrical test equipment for use by electricians*.

UPDATED TO: IEE WIRING REGULATIONS 17TH EDITION BS7671:2008

www.niceicgroup.com

For further copies of this guide telephone 0870 0130382 or e-mail customerservice@niceic.com

© Pocket Guide **5** rev 2 03/08

POCKET GUIDE 5

POCKET GUIDE 5

GUIDE TO ISOLATION PROCEDURE (continued)

Step 3

(steps 1 and 2 are shown overleaf)

Using a voltage detection instrument, check that there is no dangerous voltage present on any circuit conductor to be worked on. It is important to confirm that conductors are **not** energized, for example, due to a wiring fault. Check terminal voltages between: (1) earth and line, (2) neutral and line (as shown) and (3) earth and neutral.

Notes:

a. In practice the equipment being worked on is likely to be remote from the consumer unit, for example, a socket-outlet located remotely from the means of isolation. In this case it is necessary to check that all the socket-outlet contact terminals are **dead**.

b. When checking for a voltage between an earth terminal and live (including neutral) terminals, the test probe should make contact with the earth terminal first, to reduce the risk of the remaining probe becoming live.

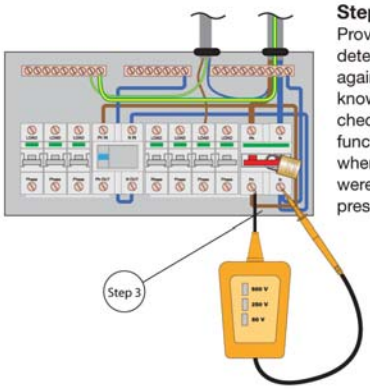

Step 4

Prove the voltage detection instrument again against the known source to check that it was functioning correctly when the circuit(s) were tested for the presence of voltage.

NOTES (also see notes overleaf)

(6) The *Electricity at Work Regulations 1989* require precautions to be taken against the risk of death or personal injury from electricity in work activities. Regulation 12 requires that, where necessary to prevent **danger**: a suitable means is available for cutting off the supply of electrical energy to any electrical equipment, and isolation of any electrical equipment.

(7) The Health and Safety Executive booklet *HSR25 - Memorandum of guidance on the Electricity at Work Regulations 1989* is intended to help duty holders meet the requirements of the Regulations.

© Pocket Guide **5** rev 2 03/08

NICEIC Pocket Guide No 5

Copies of this and other NICEIC Pocket Guides may be downloaded from **www.niceic.com**

Alternatively email **customerseivices@niceic.com** or telephone **0870 013 0382**

©The Electrical Safety Council

Annex 4

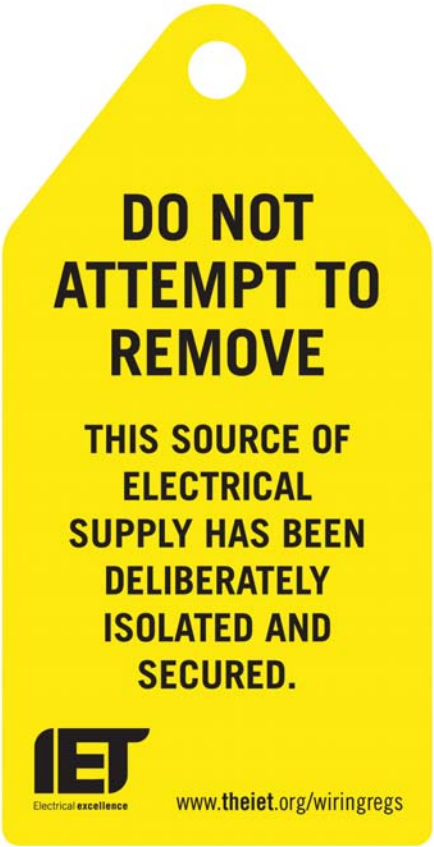

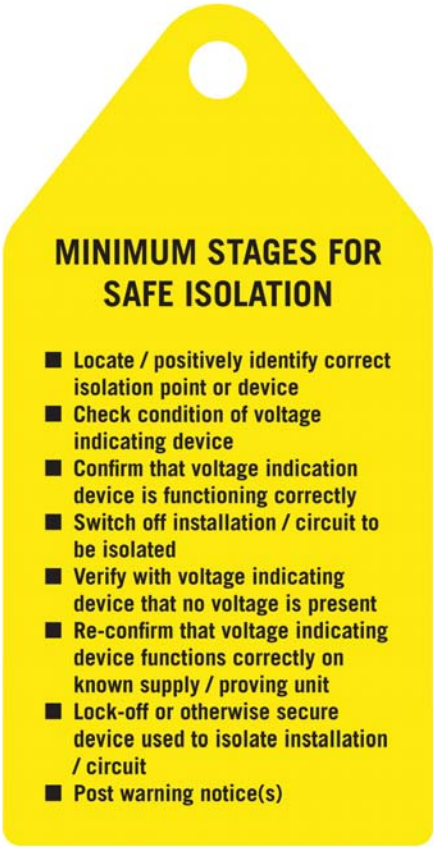

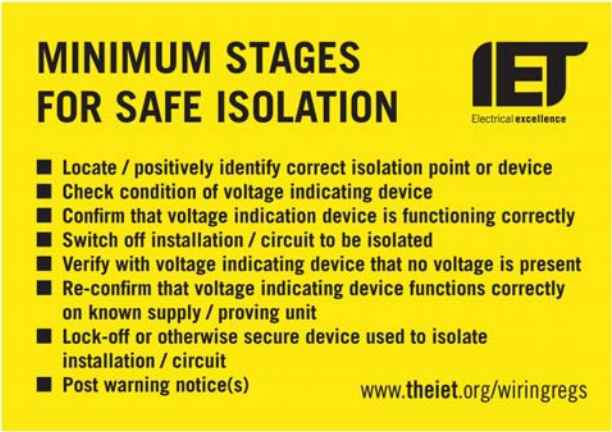

Double-sided safe isolation 'warning flag' and sticker available free of charge from:
The Institution of Engineering and Technology, PO Box 96, Stevenage, Herts, SG1 2SD.

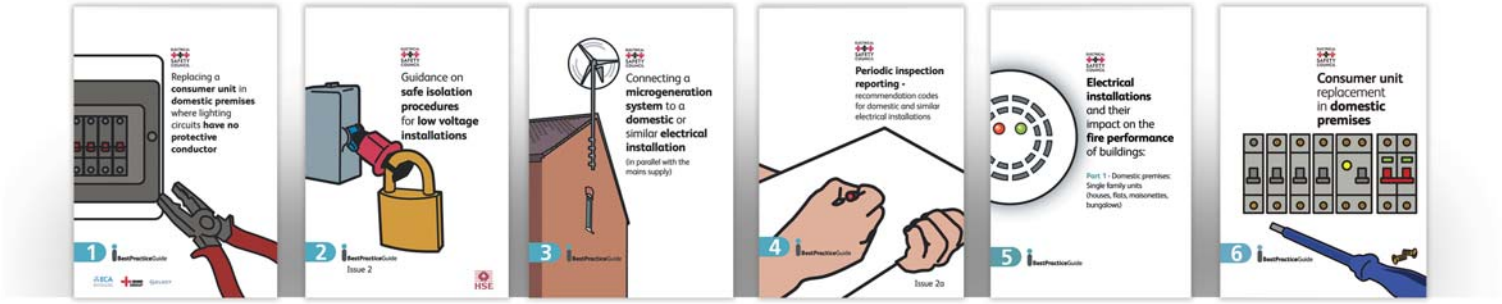

The latest versions of all the **BestPractice**Guides
are avalable to download from www.**esc**.org.uk

The Electrical Safety Council

18 Buckingham Gate, London, SW1E 6LB Phone: 0870 040 0561 Fax: 0870 040 0560
Email: enquiries@**esc**.org.uk Web: www.**esc**.org.uk

Registered Charity No. 257376

The Electrical Safety Council is an independent charity committed to reducing deaths and injuries through electrical accidents at home and at work.

ELECTRICAL SAFETY COUNCIL